GILLMORE
BRITISH DESIGN

ASSEMBLY INSTRUCTIONS 1/2

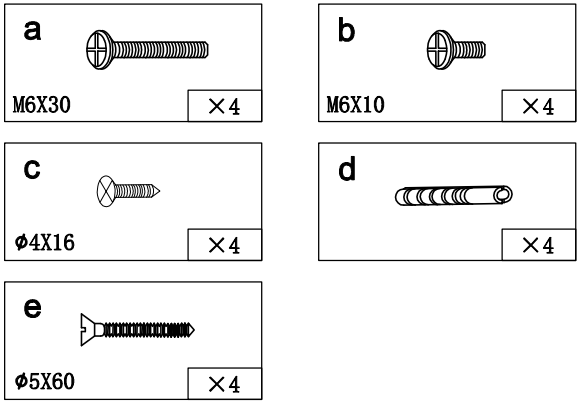

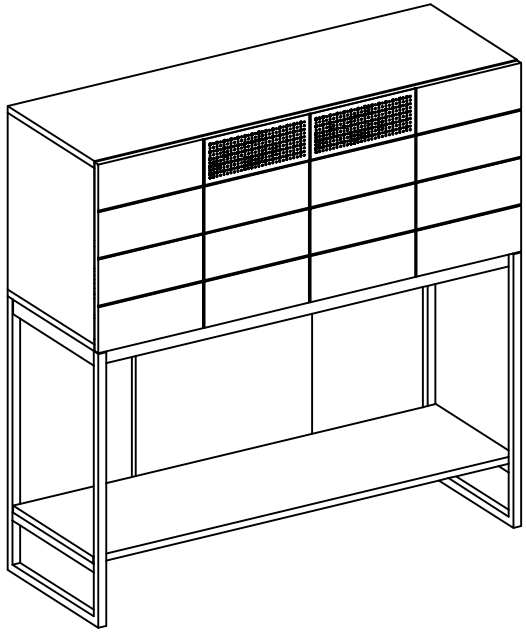

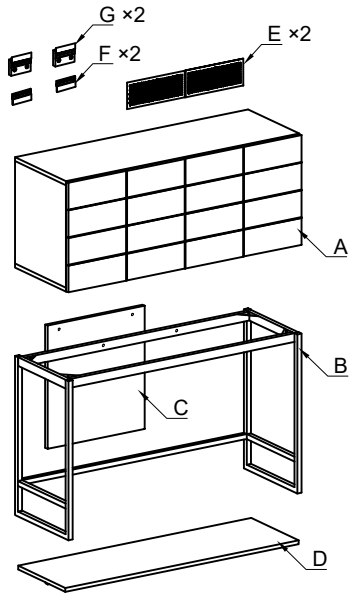

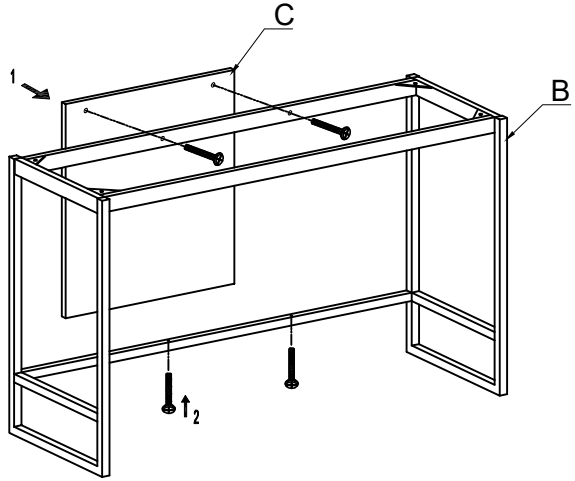

1

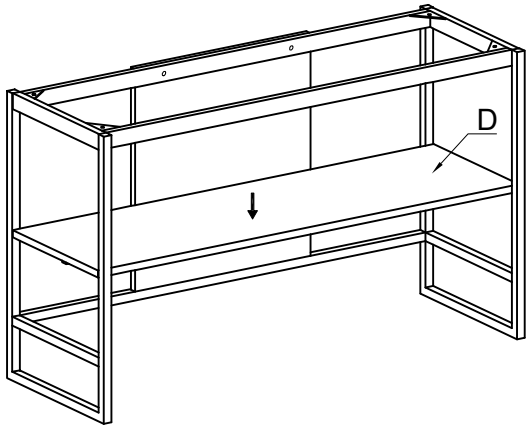

2

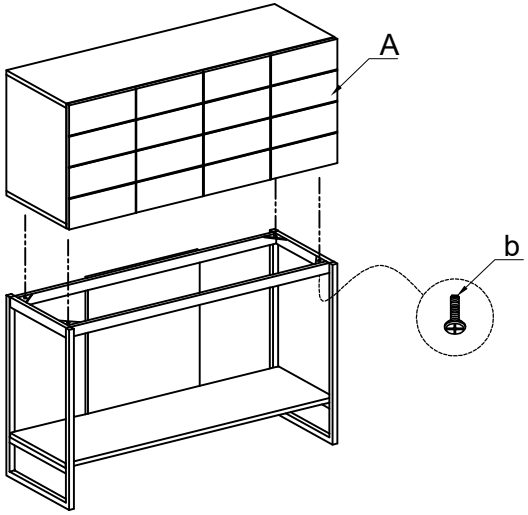

3

Copyright©2021 GillmoreSPACE Ltd-All Rights Reserved

GILLMORE
BRITISH DESIGN

ASSEMBLY INSTRUCTIONS 2/2

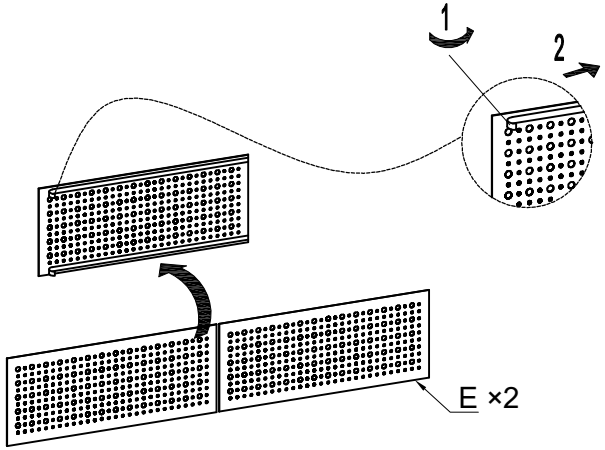

4

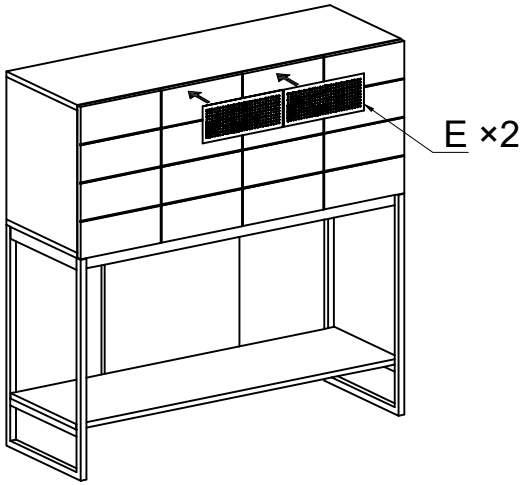

5

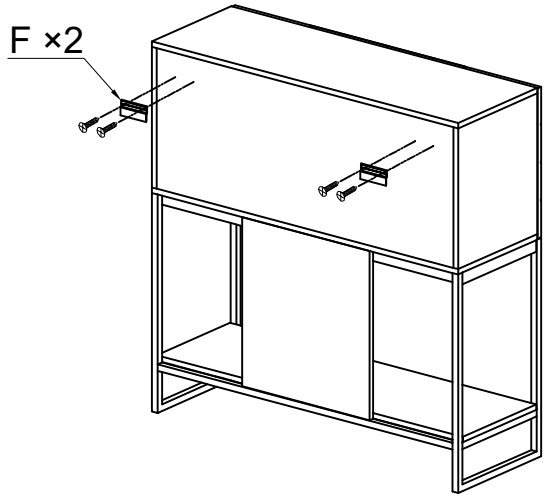

6

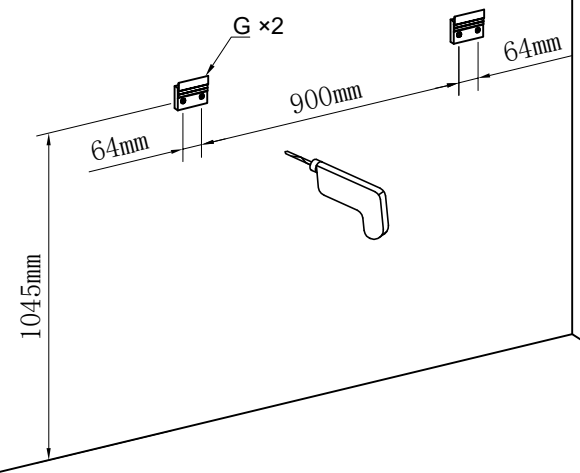

7

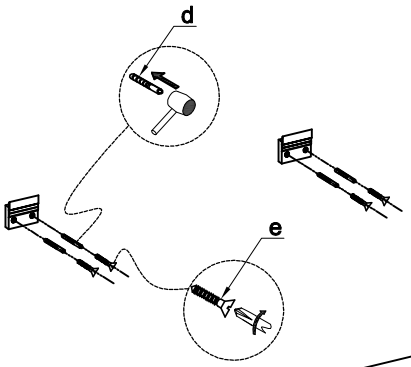

8

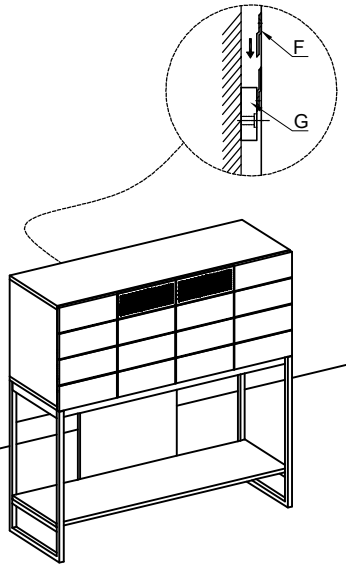

9

Copyright©2021 GillmoreSPACE Ltd-All Rights Reserved