GILLMORE
BRITISH DESIGN

ASSEMBLY INSTRUCTIONS 1/1

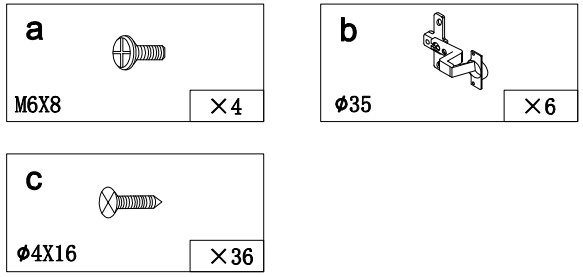

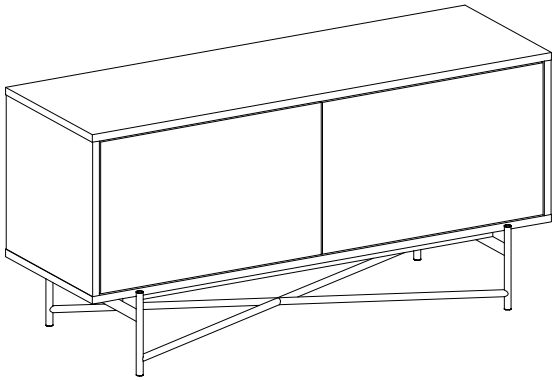

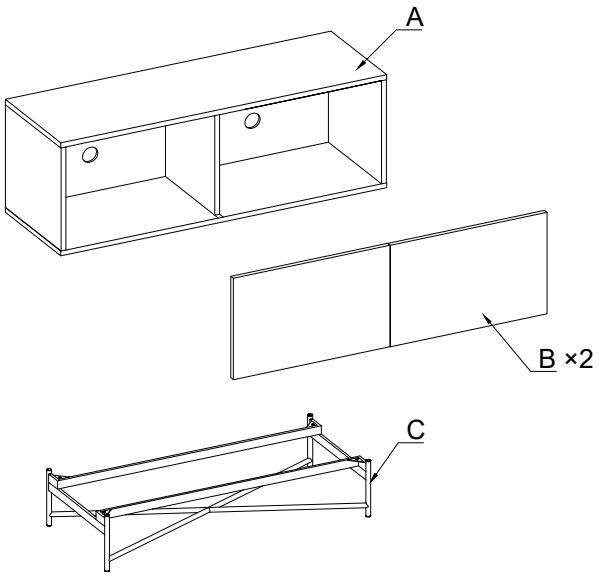

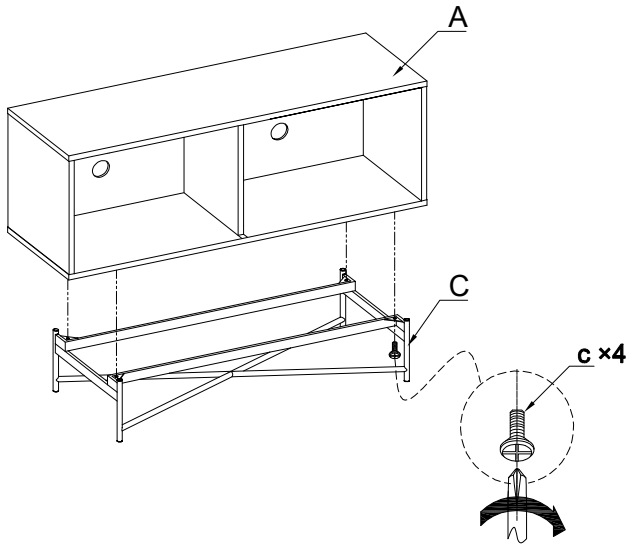

1

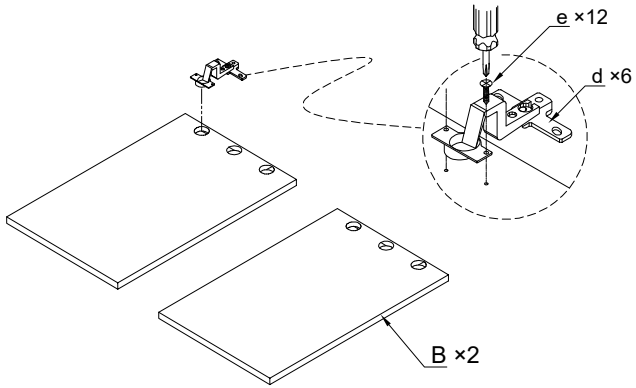

2

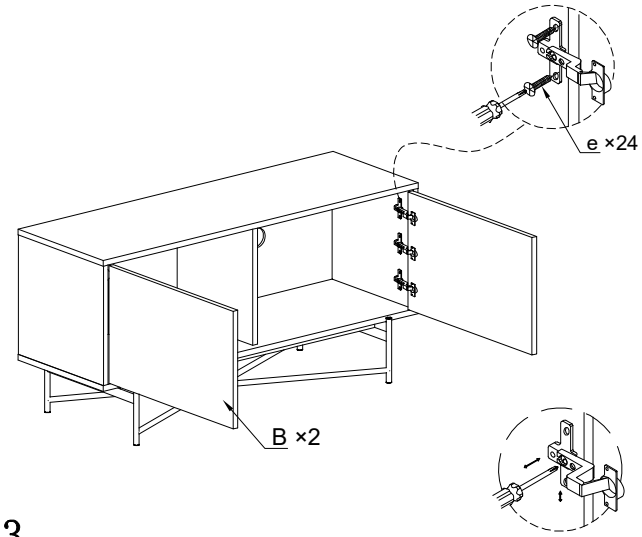

3

Copyright©2021 GillmoreSPACE Ltd-All Rights Reserved