316-223
BEDSTEND DOUBLE - FITZROY

Version:1.0

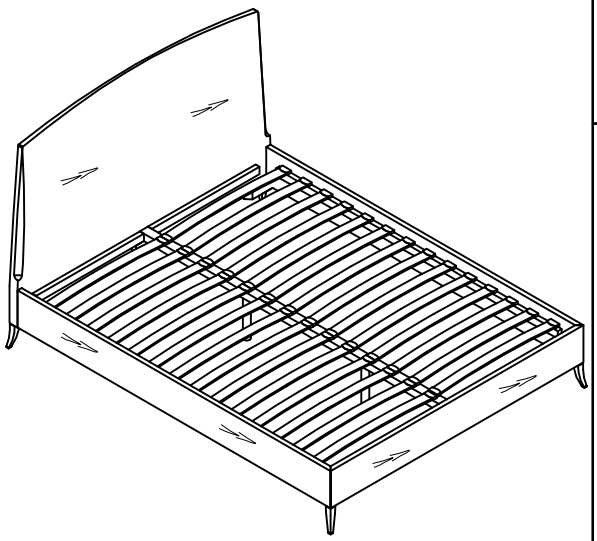

A M8*100 x4	B M8 x4	C M8 x4	D 316-112 x4	E 14mm x1	F ϕ8*40 x6
G M8*20 x12	H M8*55 x2	I M8*75 x4	J M5 x1	K ϕ35 x4	L x2
M x56	N 316-223 x1				

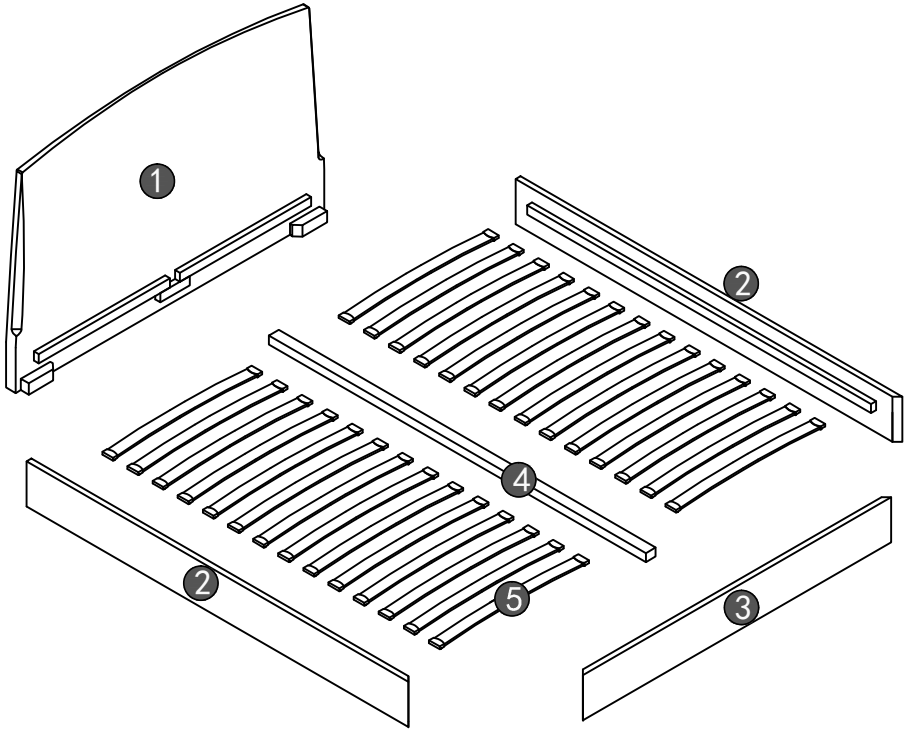

316-223
BEDSTEND DOUBLE - FITZROY

Version:1.0

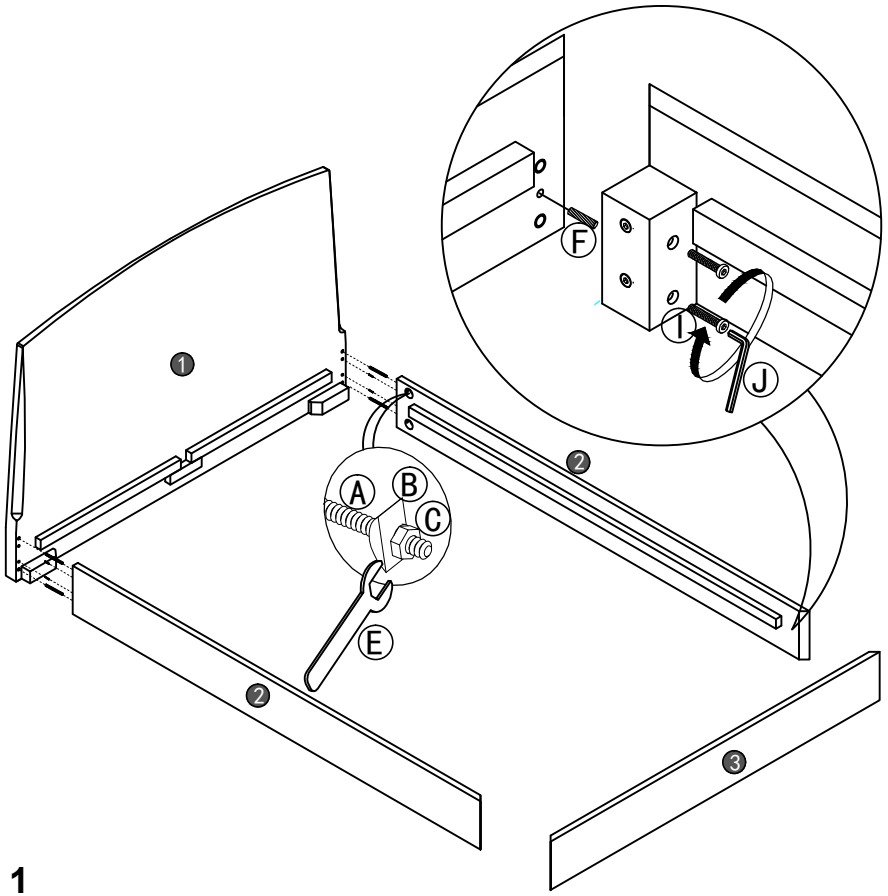

1

Caution:

The bed must be raised and laid down horizontally by 2 people with care. Otherwise, the legs would break easily.

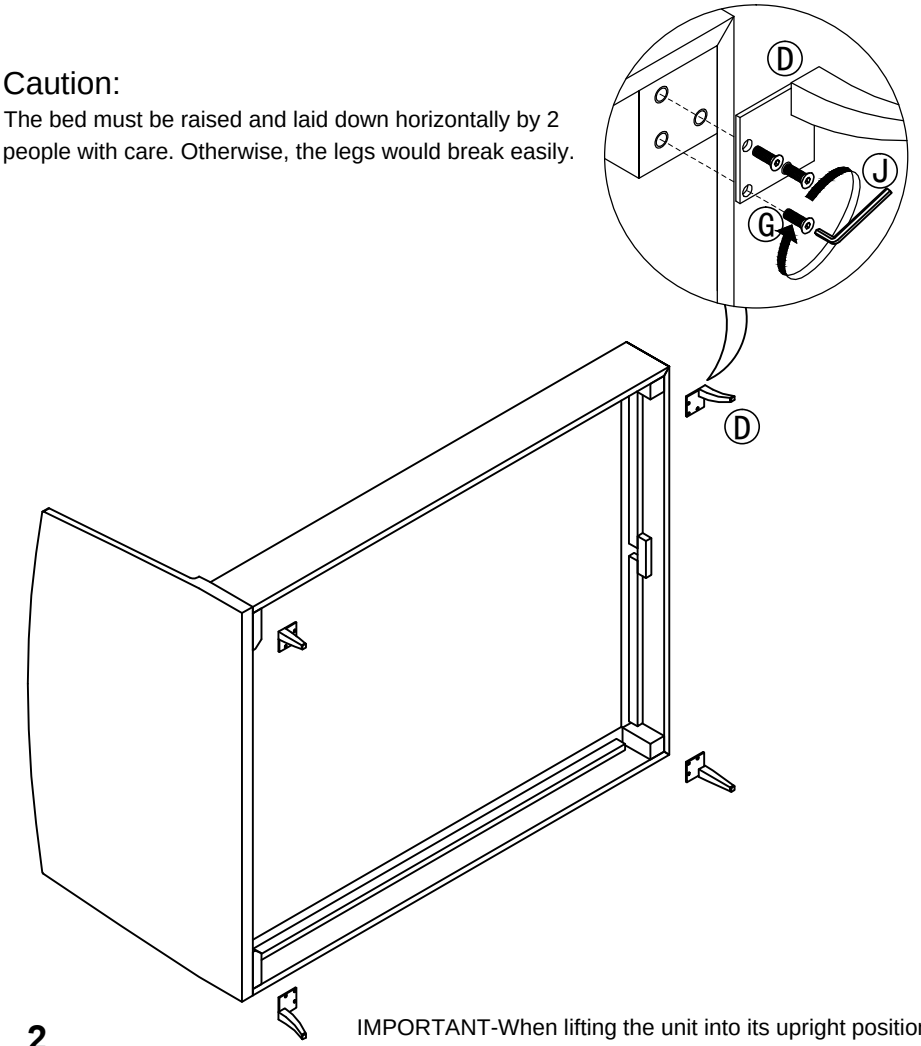

2

IMPORTANT-When lifting the unit into its upright position DO NOT pivot it on its legs.

316-223

BEDSTEND DOUBLE - FITZROY

Version:1.0

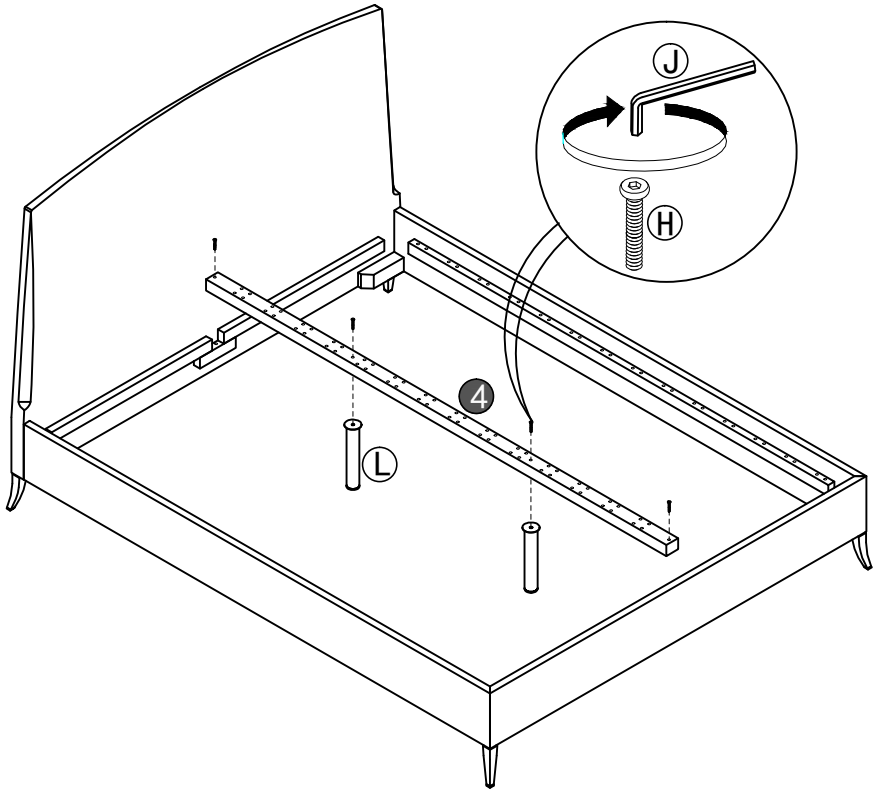

3

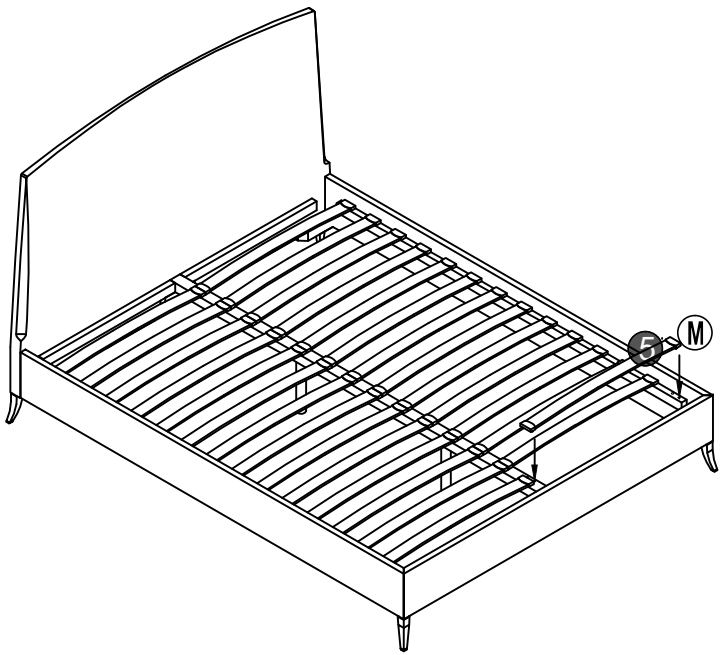

4